Star Trek: The Motion Picture

Enterprise - Primary Hull - Bridge B/C Deck Port Elevation

Scale 1:120
1" inch = 10' feet

Digital re-creaton of a 1979
undated production drawing
by Leslie G. Ekker.

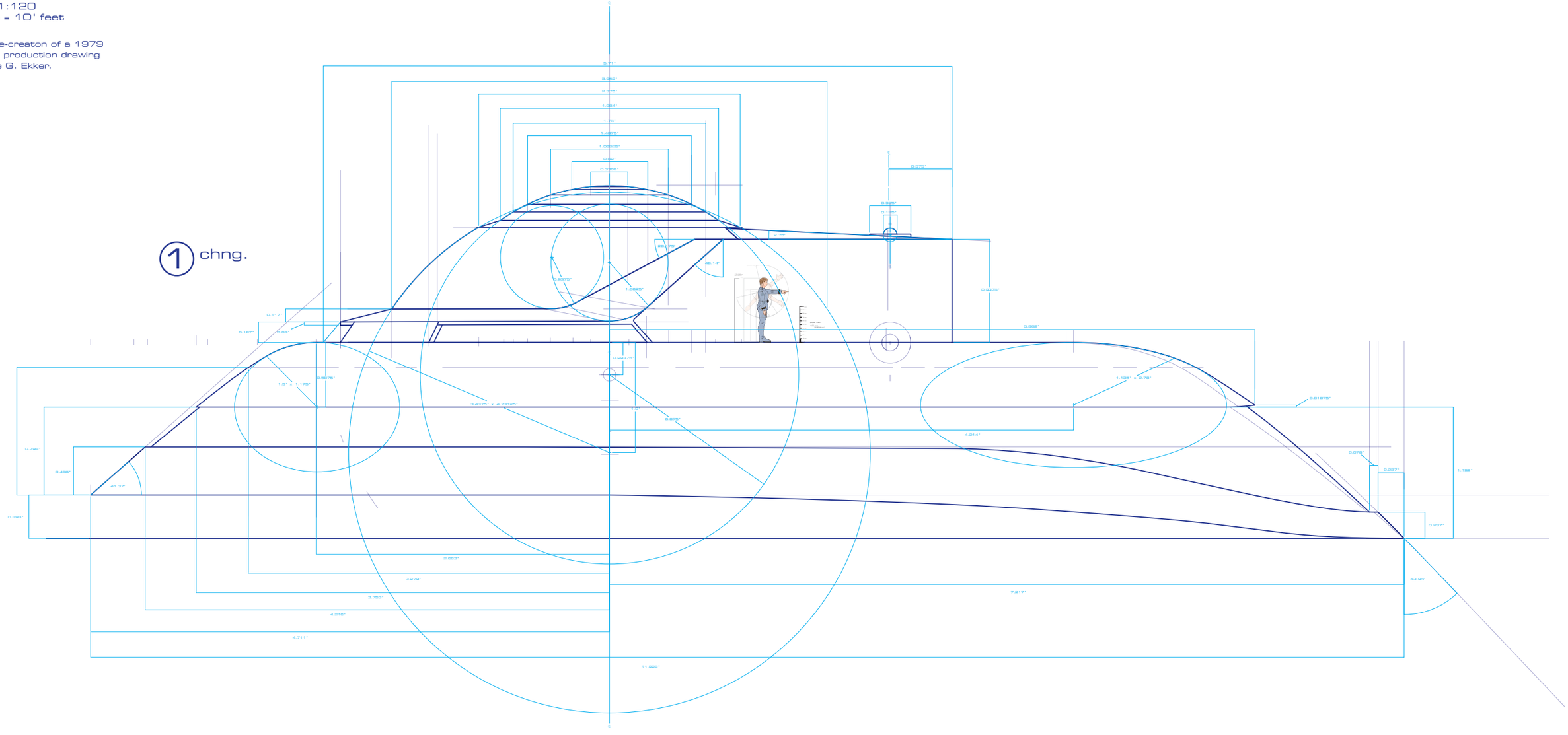

Side Elev.